REV.	DATE	DESCRIPTION
1	16 JUNE 2022	REVISIONS FOR CITY PLAN REVIEW

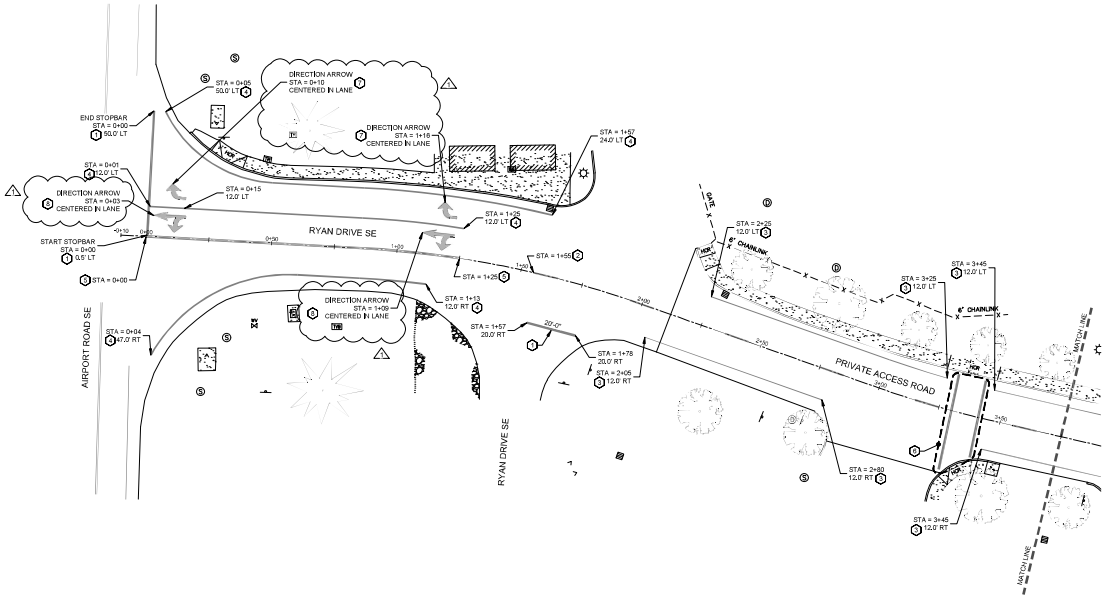

STRIPING PLAN - WEST

1" = 20'-0"

(PLANS TO SCALE IF BAR MEASURES 2")

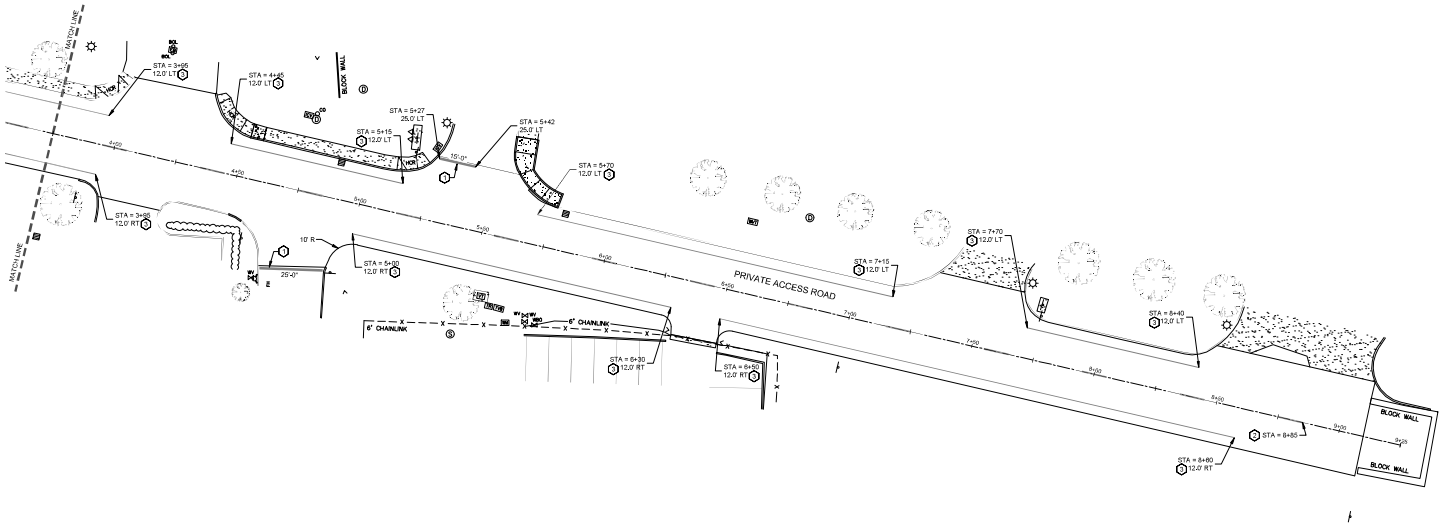

STRIPING PLAN - EAST

1" = 20'-0"

(PLANS TO SCALE IF BAR MEASURES 2")

KEYED STRIPING PLAN NOTES (SP):

GENERAL
NOTES SPECIFICALLY CALLED OUT ON PLAN ARE IN ADDITION TO ANY INCIDENTAL WORK NECESSARY TO PERFORM THE REQUIRED WORK. NOT ALL REQUIRED WORK MAY HAVE BEEN IDENTIFIED. ALL MATERIALS AND PREPARATION OF NEW AND EXISTING SURFACES TO RECEIVE PAINT SHALL BE ACCORDING TO SPECIFICATIONS.

1. THERMOPLASTIC - STOP BAR, 12" WHITE BAR PER DETAIL "D" OF CITY OF SALEM STANDARD PLAN NO. 322A ON SHEET C4.51 AND CITY OF SALEM STANDARD CONSTRUCTION SPECIFICATIONS.
2. PAINT - START/STOP PROPOSED STREET CENTER LINE SKIP STRIPE, 4" DASHED YELLOW LINE PER DETAIL "F" OF CITY OF SALEM STANDARD PLAN NO. 322A ON SHEET C4.51 AND CITY OF SALEM STANDARD CONSTRUCTION SPECIFICATIONS. NO RAISED MARKERS.
3. PAINT - START/STOP PROPOSED STREET FOG LINE, 4" SOLID WHITE.
4. PAINT W/GLASS BEADS - START/STOP PROPOSED STREET LANE LINE, 8" SOLID WHITE LINE SIMILAR TO DETAIL "H" OF CITY OF SALEM STANDARD PLAN NO. 322A ON SHEET C4.51 AND CITY OF SALEM STANDARD CONSTRUCTION SPECIFICATIONS. NO RAISED MARKERS.
5. PAINT W/GLASS BEADS - START/STOP PROPOSED STREET DOUBLE YELLOW LINE, TWO 4" YELLOW LINES PER DETAIL "K" OF CITY OF SALEM STANDARD PLAN NO. 322A ON SHEET C4.51 AND CITY OF SALEM STANDARD CONSTRUCTION SPECIFICATIONS.
6. THERMOPLASTIC - PROPOSED CROSSWALK, TWO 12" WHITE LINES PER DETAIL "A" OF CITY OF SALEM STANDARD PLAN NO. 322A OR SHEET C4.51 AND CITY OF SALEM STANDARD CONSTRUCTION SPECIFICATIONS.
7. THERMOPLASTIC - PROPOSED RIGHT TURN LANE MARKING, WHITE ARROW PER DETAIL "P" OF CITY OF SALEM STANDARD PLAN NO 322B ON SHEET C4.51 AND CITY OF SALEM STANDARD CONSTRUCTION SPECIFICATIONS.
8. THERMOPLASTIC - PROPOSED THRU AND TURN LANE MARKING, WHITE ARROW PER DETAIL "R" (OPP. HAND) OF CITY OF SALEM STANDARD PLAN NO. 322B ON SHEET C4.51 AND CITY OF SALEM STANDARD CONSTRUCTION SPECIFICATIONS.

REGISTERED PROFESSIONAL ENGINEER
16,650
DIGITAL SIGNATURE
OREGON
JULY 25, 1997
GREG D. LOCKE
EXPIRES: 12-31-2022

DIGITAL SIGNATURE: This document has been signed and sealed in accordance with the applicable Oregon State Board of Engineering and Land Surveying Rules. Printed copies of this document are not to be considered as authentic unless they are signed and sealed in accordance with the applicable Oregon State Board of Engineering and Land Surveying Rules.

Drawings produced by this engineer are instruments of service for this project only and are the property of this engineer. Unauthorized use and reproduction of these drawings and specifications, or any other project without the prior written permission of this engineer, shall be at the user's sole risk, and the user agrees to defend, indemnify and hold this engineer harmless from all claims, damages, and expenses including attorney's fees arising out of such use, reuse or or alleged arising out of unauthorized use by the user. Engineer is not responsible for the unauthorized use of these drawings. All instruments of service must be reported to the engineer immediately.

Locke CIVIL & STRUCTURAL ENGINEERS
289 E Ellendale Ave, Suite 703
Dallas, Oregon 97338
503.364.2207 LockeEngineers.com

CONFORMED SET - 04 OCT 2022

OREGON DEPT. OF ADMINISTRATIVE SERVICES
PARKING LOT UPGRADE PROJECT
SALEM MOTOR POOL DRIVEWAY
1100 AIRPORT ROAD SE, SALEM OREGON

STRIPING PLAN

JOB NO.	20005-1
DATE	APRIL 4, 2022
DESIGN BY	GL
CHECKED BY	GL
SHEET	C4.15

05-04-2022 3:49 PM
U:\2020\20005-DAS - Motor Pool Parking Upgrade Project\Civil\Project #: - MotorPool Motor Pool Driveway\20005- MOTOR POOL DRIVEWAY - CIVIL PLAN.dwg